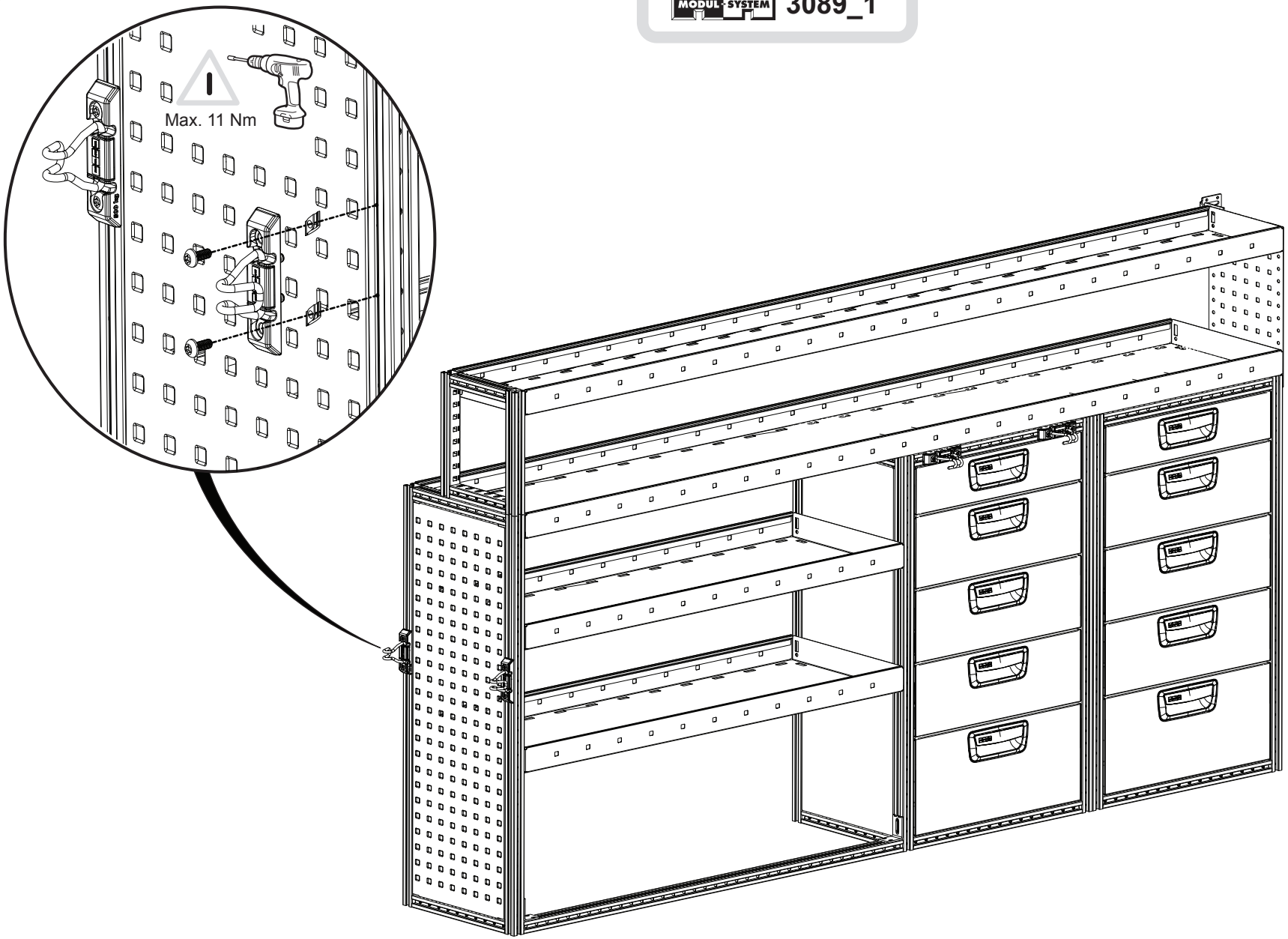
Max. 11 Nm